… In Every Environment

MAFNA Air Technologies Inc






CUSTOM Design ~ Engineering ~ Manufacturing

MAFNA AIR TECHNOLOGIES Inc.
475 Sheldon Dr, Cambridge, ON, Canada, N1T 2B7
V: (519) 624 4622 F: (519) 624 9854 mafna@mafna.com

Corporate Profile and Operation Summary

About MAFNA

MAFNA Air Technologies, Inc. established in the year 1999 as a result of over 22 years of knowledge and experience in innovative design & engineering in the field of Heating, Ventilation and Air-conditioning, business management, marketing and customer relationship. The principals of MAFNA started in the HVAC industry 23 years ago. Driven by their passion for designing innovative equipment and providing highest level of engineering services in the HVAC Industry, it was evident that their technical and entrepreneurial spirit of honesty and integrity would be the foundation for a reliable and dependable company in the long term.

Since its inception MAFNA has demonstrated exemplary growth and is now represented in major local, US and Overseas market through a network of reputable representatives in the respective region. This growth convinced MAFNA that a combination of a team of top professionals and innovative thinking held huge national potential for this local based design, engineering and manufacturing company.

Manufacturing:

MAFNA has developed unique interactive manufacturing program that allows the firm to tap into manufacturing talent and technology of other industries as well. In addition to owning its own plant on a 3 acre land in an Industrial subdivision of the City of Cambridge, ON, Canada, MAFNA has excellent alliances and partnerships with dedicated fabricators and facilities. This alliance provides MAFNA the unique ability to offer enhanced products and services to its customers in Steel, Aluminum or Stainless Steel based custom built manufacturing.

Knowledge:

Delivering an innovative and affordable Air Handling Solution does not happen by chance. It requires a comprehensive understanding of all available technologies that can be delivered by a team of trained and experienced engineering professionals. MAFNA understands this reality and continuously invests in training and development of their engineers with an eye on excellence. All MAFNA Engineers have in-depth experience in all facets of design and engineering within the HVAC field, as is evident in the development of MAFNA's numerous products in Air Handling Solutions.

MAFNA AIR TECHNOLOGIES Inc.
475 Sheldon Dr, Cambridge, ON, Canada, N1T 2B7
V: (519) 624 4622 F: (519) 624 9854 mafna@mafna.com

Customer and Client Partnerships:

Choosing MAFNA as your Air Handling and Custom Built Equipment solution provider is a significant decision that we take very seriously. We believe in developing long lasting relationships with our clients built on repeated success and professionalism. We accomplish this by assuming a complete engineering and design responsibility for solutions that we provide from concept to commissioning.

Innovation & Engineering:

The various US patents awarded to Principals of MAFNA are a testimony to the ingenuity of MAFNA's Engineering team. Each of MAFNA's design and layout of custom-built equipment is premised on significant but proven innovation and creativity, majority of which are patent enabled. This is achieved by strong aptitude and commitment towards incorporating new technologies including computation fluid dynamics and 3D Technologies in critical Engineering and design applications. MAFNA's engineering team has a strong background in the application of aero-acoustics and aero-dynamics principles to Air Handling Solutions.

MAFNA is currently supported by mix of Five (5) full time qualified engineers including two full time professional engineers in addition to three (3) part time / contract professional engineers, PHD scientists for the purpose of ongoing product development and innovation resulting in now three (3) additional patent applications in progress. In addition to engineering staff, MAFNA has at any point of time team of average of ten (10) shop floor personnel under various contract arrangements premised on flexible manufacturing. MAFNA leads the way with an extensive continuous support program. We are committed to assisting our local representatives & engineers with solid design, engineering and manufacturing backup.

MAFNA's Business:

Creative engineering and innovative product design based on principles of aero-acoustic and aerodynamic engineering are two principal offerings of MAFNA Air Technologies. The firm has strength in integrating different technologies to achieve multiple psychrometric process in a single compact and efficient custom design HVAC Equipment. The result is saving in space by **up to 25% and energy by up to 30%.**

MAFNA AIR TECHNOLOGIES Inc.
475 Sheldon Dr, Cambridge, ON, Canada, N1T 2B7
V: (519) 624 4622 F: (519) 624 9854 mafna@mafna.com

What gives us the competitive edge…?

- Location in a city that offers diversified national & international pool of talents in engineering and manufacturing with almost six world's top class universities within 2 hours drive.
- Strong commitment to ongoing technological development.
- Global approach to communication
- Brand name recognition. Proven operation system
- Enormous growth potential. Comprehensive training program
- Marketing program. Low fixed overheads

Business Mix:

MAFNA's business began as design and engineering arm for primary manufacturers with a role for sales, engineering, design and application which grew to 8.0 Million USD by the year 2003. MAFNA has since then repositioned itself and now offers the benefits of innovative design, engineering and manufacturing integrated with intimate knowledge of Heating, Ventilation and Air Conditioning and application of aero-acoustic principles & technologies in Air Handling Applications directly to the customers through reputable representation in respective region.

-- **End** --

Active Chilled Beam Units

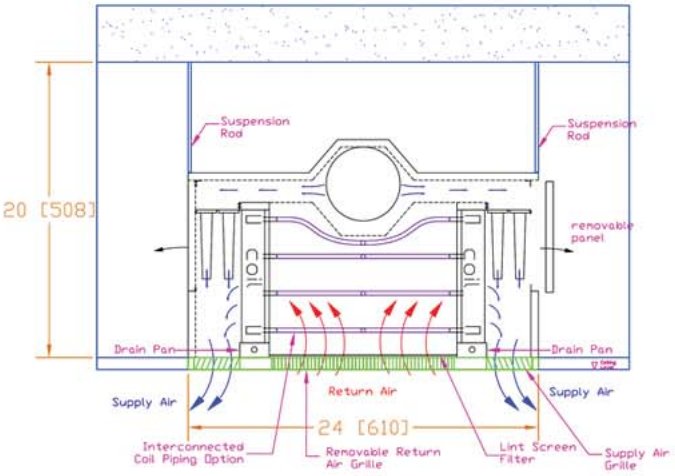

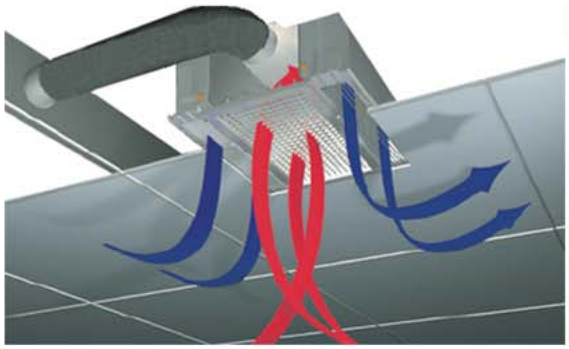

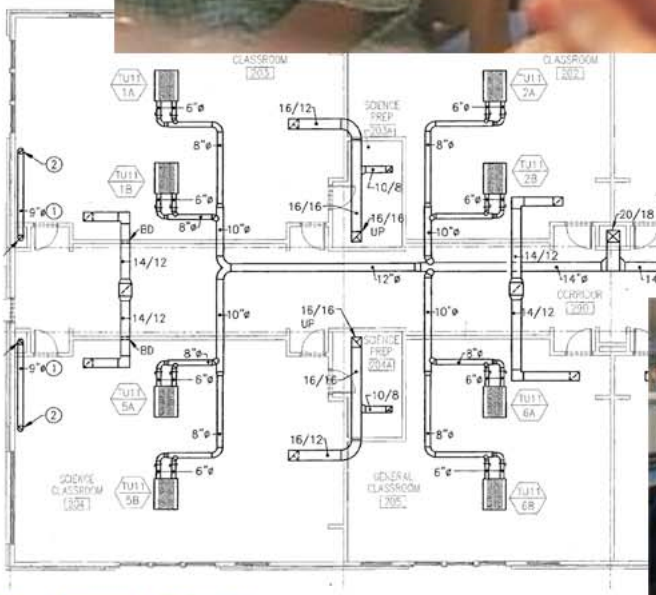

MAFNA AIR TECHNOLOGIES Inc.

A Company of Infinite Models

MAFNA AIR TECHNOLOGIES Inc.
Design and Engineering
Smart Air Solutions

SPECIAL CUSTOM CHILLED BEAM UNITS WITH AHUs / HRUs FOR ACADEMIC INSTITUTION

PROJECT	CLIENT	REPRESENTATIVE	DATE SHIPPED
Lakeridge Middle School AHUs / HRUs: 1 - 14 CBUs: 76 units	Sumner School District Sumner, WA	Mechanical Sales Seattle, WA	February 18 2010

OUTER CASING	18G SOLID SATIN COAT – PAINTED	BASE	C3 CHANNEL – EPOXY PAINTED	PANEL	2" THICK, 3.0 lbs/ft INSULATION
INNER CASING	20G SOLID G90 GALVANIZED	UNDERSIDE FLOOR	20G SOLID GALVANIZED	FLOOR	14G CHECKER PLATE – PAINTED

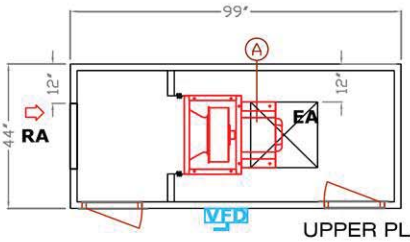

UPPER PLAN

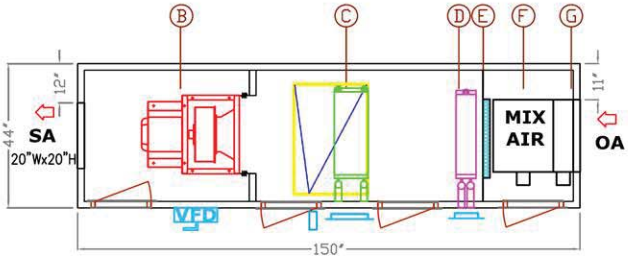

EA LOWER PLAN

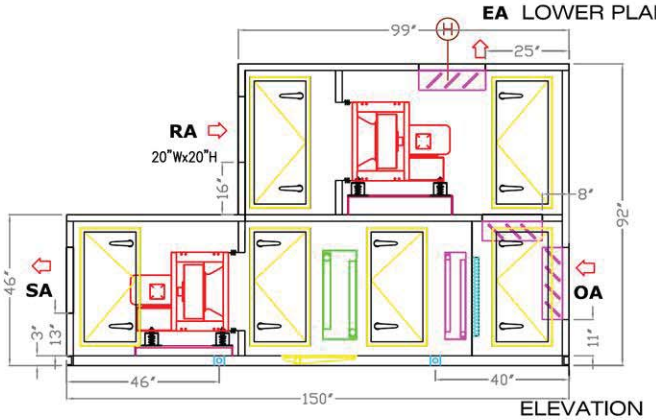

ELEVATION

SUBMITTAL DRAWING

AHU–8 460V/3Ph/60Hz

Est. Weight of Unit is 2200 Lbs

A	DIRECT DRIVEN PLENUM RF, EPQN–165 CL1, 1,500 CFM @ 0.6"TSP, 0.33 HP MOTOR
B	DIRECT DRIVEN PLENUM SF, EPQN–165 CL1, 1,500 CFM @ 1.67"TSP, 1 HP MOTOR
C	CHW Cooling Coil – 5WH1206B –24"FHx24"FL
D	HW Cooling Coil – 5MQ1301A –24"FHx24"FL
E	2" 30% Pre–Filter 24"x24" (1#)
F	Mix Air Damper 22"Wx18"H
G	OA Damper 22"Wx22"H
H	EA Damper 20"Wx20"H

Notes:
1. Single Point Power Connection
2. Access Door Size as Permitted by Construction and will be installed per plan view.

Not Provided;
Lights, AFMS and Controls, No Viewing Window for Access Door, Testing, Site Work and Balancing.

Legend:
- Magnahelic Gage
- VFD
- Removable Panel
- Lifting Lug

OPENING LIST
1. RA OPENING, 20"x20"
2. OA OPENING, 22"x22"
3. SA OPENING, 20"x20"
4. EA OPENING, 20"x20"
5. MIX AIR DAMPER OPENING, 22"x18"
6. HW COIL REMOVABLE OPENING FRONT: 7"x28"
7. CHW COIL REMOVABLE OPENING FRONT: 11"x28"
8. DOOR1 OPENING,LOWER:18"x36" –Ve RH
9. DOOR2 OPENING,LOWER:18"x36" –Ve RH
10. DOOR3 OPENING,LOWER:18"x36" –Ve RH
11. DOOR4 OPENING,LOWER:18"x36" +Ve LH
12. DOOR5 OPENING,UPPER:18"x40" +Ve RH
13. DOOR6 OPENING,UPPER:18"x40" –Ve LH
14. DRAINPAN OPENING, BASE: 20"x36"

PROJECT	2045–LMS Lakeridge Middle School Repl.	CAPACITY	1,500 CFM @ 1.67" TSP	AHU–8	Dwg #	2045–LMS

MA-NA Design and Engineering

Smart Air Solutions

SPECIAL CUSTOM CBUs WITH GRILLES & PLENUM BOXES AND AHUs FOR ACADEMIC INSTITUTION

PROJECT	CLIENT	REPRESENTATIVE	DATE SHIPPED
Madigan 9910 1 # AHUs and 42# CBUs	Madigan 9910 Fort Lewis, WA	Mechanical Sales Seattle, WA	July 27 2009

OUTER CASING	18G SOLID SATIN COAT – PAINTED	BASE	C4 CHANNEL – EPOXY PAINTED	PANEL	2" THICK, 3.0 lbs/ft INSULATION
INNER CASING	20G SOLID G90 GALVANIZED	UNDERSIDE FLOOR	20G SOLID GALVANIZED–2" THICK, 3/4PCF INSULATION	FLOOR	14G STEEL CHECKER PLATE – PAINTED

INDOOR UNIT

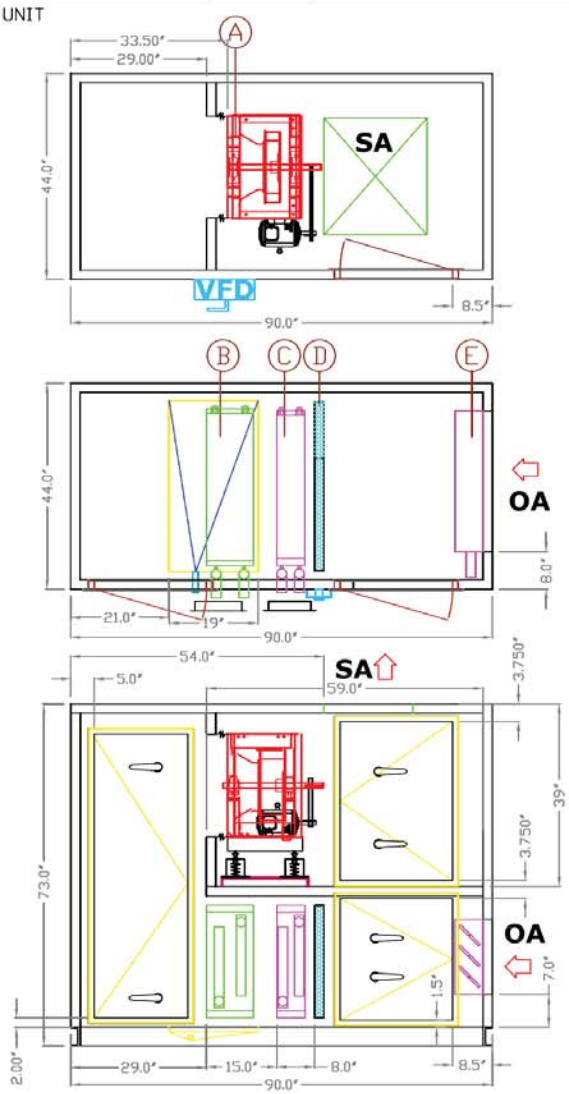

UPPER PLAN

LOWER PLAN

ELEVATION

SUBMITTAL DRAWING

AHU-1 460V / 3ph / 60Hz

(2250CFM) Est. Weight Is 1100Lbs

A	BELT DRIVEN SUPPLY FAN, EPQ 150, CLASS 2, Arr. 3 5 HP, 3600RPM, 460V/3Ph/60Hz, ODP, Prm.Eff. MOTOR
B	COOLING COIL 21"FH x 30"FL, 6 Row, #1
C	HEATING COIL 21"FH x 30"FL, 1 Row, #1
D	2" 30/30 FILTER (30%), 24"x24" #1, 24"x12"#1
E	OA DAMPER, VCD-33, 30"W x 16"H

Notes:

1. Access Door Size as Permitted by Construction

Not Provided;
Lights, AFMS and Controls, No Viewing Window for Access Door, Testing, Site Work and Balancing.

DA DAMPER OPENING: 30"W x 16"H
SA OPENING: 22"W x 25"H
DOOR OPENING: 20"W X 60"H -Ve LH #1
24"W X 26"H -Ve RH #1
24"W X 34"H +Ve RH #1
REMOVABLE PANEL OPENING:
HEATING COIL: 7" W X 25.5" H
COOLING COIL: 11" W X 25.6" H
DRAIN PAN OPENING: 19.5"W X 37"H

Legend:

- Magnehelic Gage
- Removable Panel
- VFD

PROJECT	MAMC 9910	CAPACITY	2250CFM @ 5.0"TSP	AHU-1	DRWG.#	2044-M9910

MA-NA Design and Engineering

Smart Air Solutions

SPECIAL CUSTOM CBUs WITH GRILLES & PLENUM BOXES AND AHUs FOR ACADEMIC INSTITUTION

PROJECT	CLIENT	REPRESENTATIVE	DATE SHIPPED
Cascadia Elementary School 11 # AHUs and 72# CBUs	Cascadia Elementary School Sumner, WA	Mechanical Sales Seattle, WA	May 15 2009

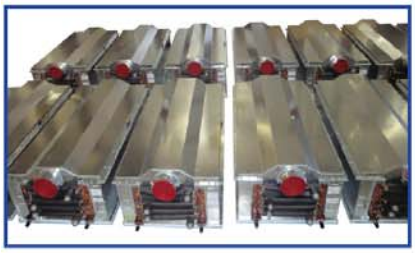

OUTER CASING	18G SOLID SATIN COAT – PAINTED	BASE	C4 CHANNEL – EPOXY PAINTED	PANEL	2" THICK, 3.0 lbs/ft INSULATION
INNER CASING	20G SOLID G90 GALVANIZED	UNDERSIDE FLOOR	20G SOLID GALVANIZED	FLOOR	14G STEEL CHECKER PLATE – PAINTED

SUBMITTAL DRAWING

AHU–1 208V/3Ph/60Hz

Est. Weight of Unit is 2300Lbs

A	OA Damper 24"Wx24"H
B	RA Damper 24"Wx24"H
C	2" 30% Pre–Filter 20"x20" (4#)
D	HW Coil – 5MH1101A –30"FHx44"FL
E	CHW Cooling Coil – 5WL1206A –30"FHx44"FL
F	DIRECT DRIVEN PLENUM SF, EPQN–222 CL1, 4400CFM @ 4.95"TSP, 7.5 HP MOTOR

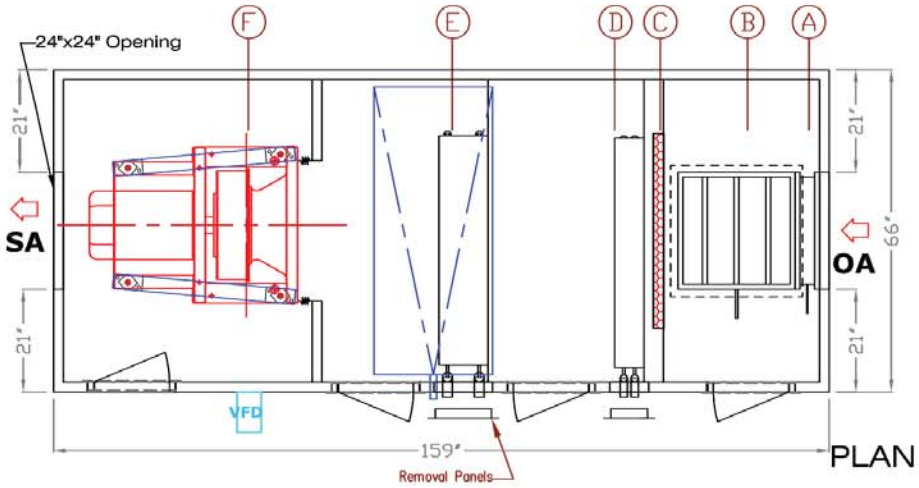

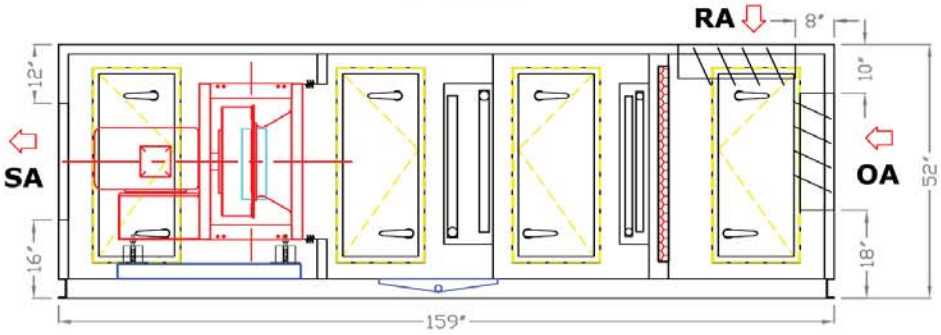

SA TRANSITION IN THE DUCT IN FIELD

ELEVATION

Notes:

1. Access Door Size as Permitted by Construction

Not Provided;
Lights, AFMS and Controls, No Viewing Window for Access Door, Testing, Site Work and Balancing.

DOORS OPENING:
P/L 1 PC 18" W X 40" H X 2" T
N/L 1 PC 18" W X 40" H X 2" T
N/R 2 PCS 18" W X 40" H X 2" T
DRAINPAN OPENING:
24.8125"W x 59.5"L
REMOVABLE OPENING:
HW COIL: 8"W x 35"H
CHW COIL: 12"W x 35"H

OTHER OPENING:
SA: 24"W x 24"H
OA: 24"W x 24"H
RA: 24"W x 24"H

Legend:

- Magnahelic Gage
- Removable Panel
- VFD Variable Frequency Drive

PROJECT	Cascadia Elementary School–Sumner S.D	CAPACITY	4,400CFM @ 4.95"TSP	AHU–1	DRWG.#	2031–CES–1

MA-NA Design and Engineering

Smart Air Solutions

CHILLED BEAM UNITS WITH AHUS FOR SCHOOL APPLICATIONS

PROJECT	CLIENT	REPRESENTATIVE	DATE SHIPPED
Madigan Building AHU-1 (1,590 CFM), AHU-2 (2,180 CFM) & CBUs	Blue Mountain Mechanical Fort Lewis, WA	KJ Barnett Company Redmond, WA	July 25 2007

OUTER CASING	18G SOLID SATIN COAT – PAINTED	BASE	C3 CHANNEL/TUBE – EPOXY PAINTED	PANEL	1" THICK, 3.0 lbs/ft INSULATION
INNER CASING	20G SOLID G90 GALVANIZED (PERF. IN FAN SECTION)	UNDERSIDE FLOOR	20G SOLID GALVANIZED	FLOOR	14G S.C – PAINTED

A	2" 30% PLEATED FILTER 20"X20",2#
B	HOT WATER HEATING COIL,36"FLX18"FH
C	CHILLED WATER COOLING COIL,36"FLX18"FH
D	TWIN CITY PLENUM FAN

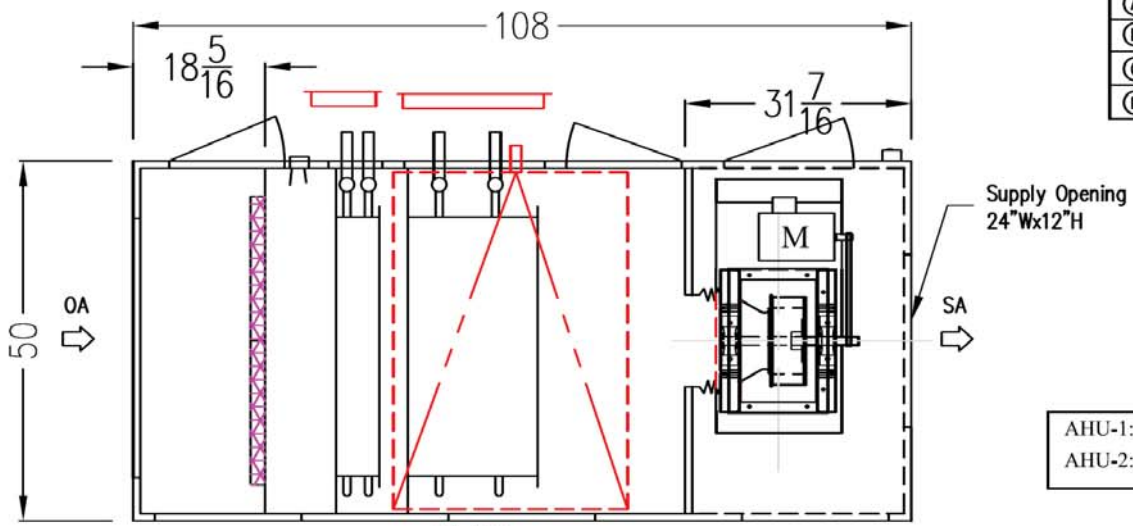

PLAN

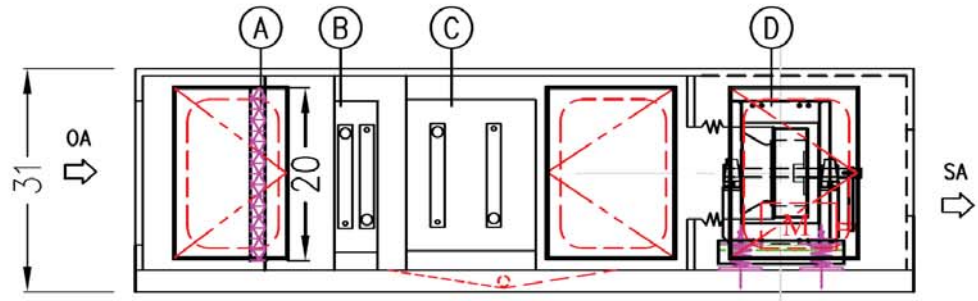

ELEVATION

AHU-1:1590CFM@3.7"TSP(2.0"ESP)
AHU-2:2180CFM@4.4"TSP(2.0"ESP)

Note:

1. Power Supplys (120V/1/60) for Fan is 230/460V–3–60
   No Lights Inside The Unit
2. Access Door Size as Permitted by Construction
3. 16G SS 304 Drain Pan
4. Estimated Weight: 850 lbs

PROJECT	MADIGAN BUILDINGS AHU	PROJECT	2180CFM @ 4.4"TSP (2.0"ESP)	AHU–2	IN–1064

MAFNA AIR TECHNOLOGIES Inc.
Design and Engineering
Smart Air Solutions

CUSTOM CHILLED BEAM UNITS FOR ACADEMIC INSTITUTIONS

PROJECT	CLIENT	REPRESENTATIVE	DATE SHIPPED
Clarkmoor - Greenwood Elementary Schools Qty: 185 CBUs	Clover Park Schools Lakewood, WA	Mechanical Sales Seattle, WA	February 12 2014

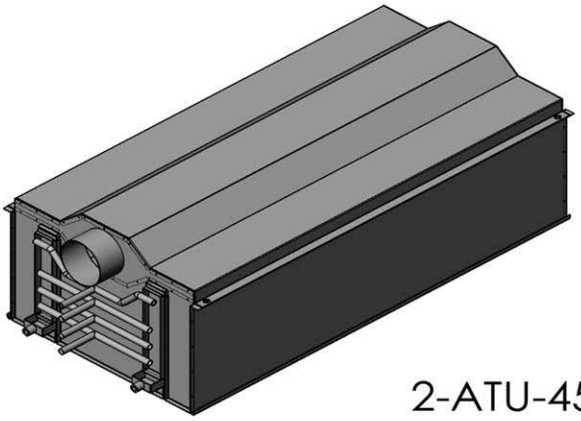

2-ATU-45

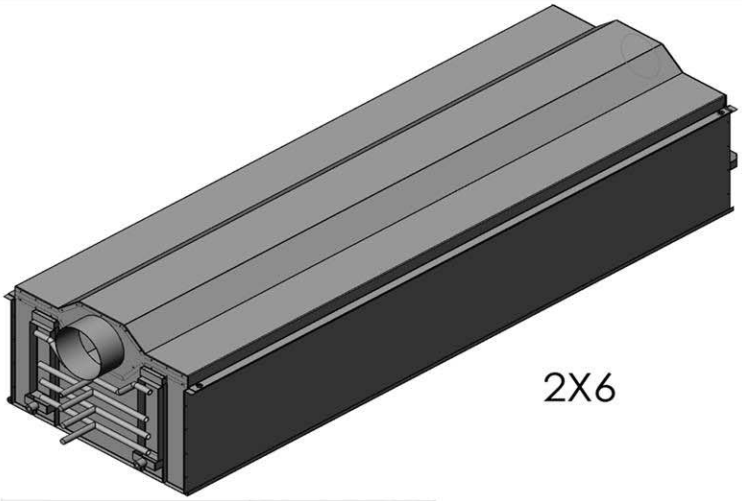

2X6

MAFNA AIR TECHNOLOGIES INC.
475 Sheldon Dr, Cambridge, Ont, Canada, N1T 2B7
(T): 519.624.4622 (F): 519.624.9854
PROJECT: CM-GW

This document contains confidential information proprietary to MAFNA Air Technologies Inc. No portion may be produced or disclosed to other s.used in any way, except as authorized in writing by MAFNA Air Technologies Inc.

1 2 3

MAFNA AIR TECHNOLOGIES INC.
475 Sheldon Dr, Cambridge, Ont, Canada, N1T 2B7
(T): 519.624.4622 (F): 519.624.9854
PROJECT:

This document contains confidential information proprietary to MAFNA Air Technologies Inc. No portion may be produced or disclosed to other s.used in any way, except as authorized in writing by MAFNA Air Technologies Inc.

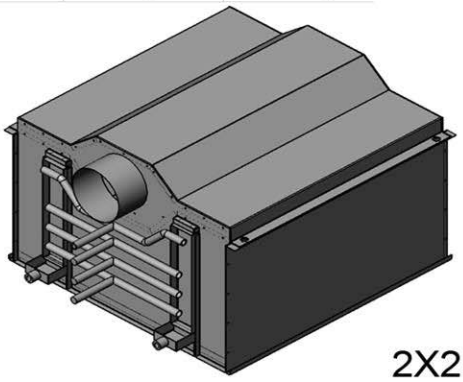

2X2

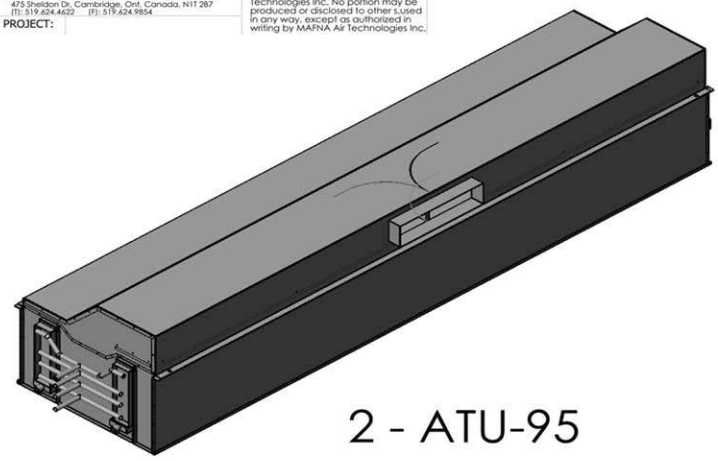

2 - ATU-95

MAFNA AIR TECHNOLOGIES Inc.
Design and Engineering
Smart Air Solutions

CUSTOM CHILLED BEAM UNITS

PROJECT	CLIENT	REPRESENTATIVE	DATE SHIPPED
Carter Lake Elementary School CBUs: Qty (83)	Carter Lake Elementary School Tacoma, WA	Mechanical Sales Seattle, WA	March 1 2013

2-CBU-95

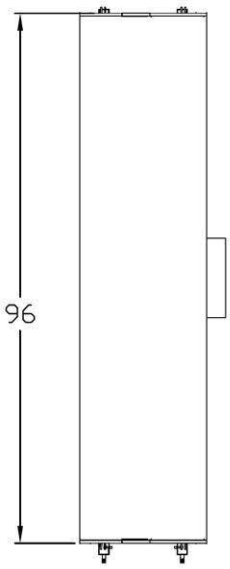

PLAN

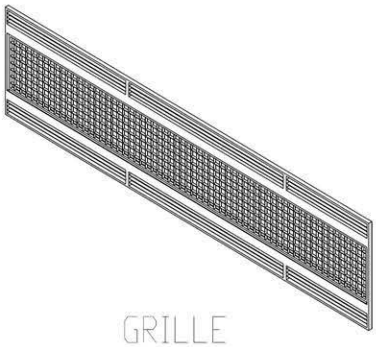

GRILLE

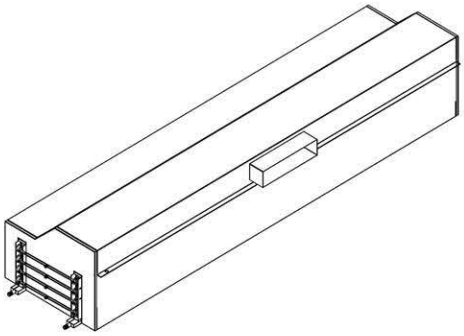

3D VIEW

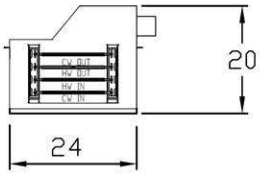

FRONT VIEW

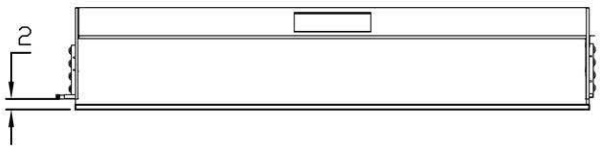

SIDE VIEW

MAFNA AIR TECHNOLOGIES Inc.
Design and Engineering
Smart Air Solutions

CUSTOM CHILLED BEAM UNITS

PROJECT	CLIENT	REPRESENTATIVE	DATE SHIPPED
Madigan Army Medical Center, Bldg. 9922B #19 CBUs	US Army Corps Fort Lewis, WA	Mechanical Sales Seattle, WA	June 13 2012

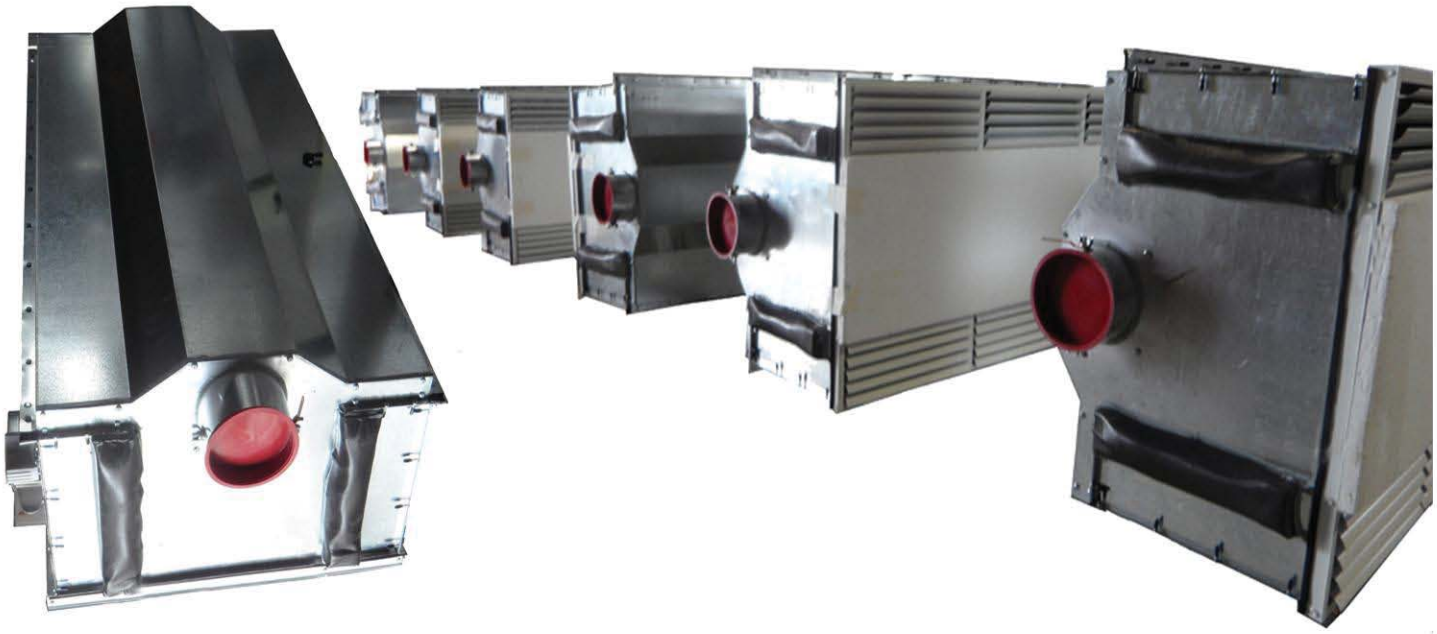

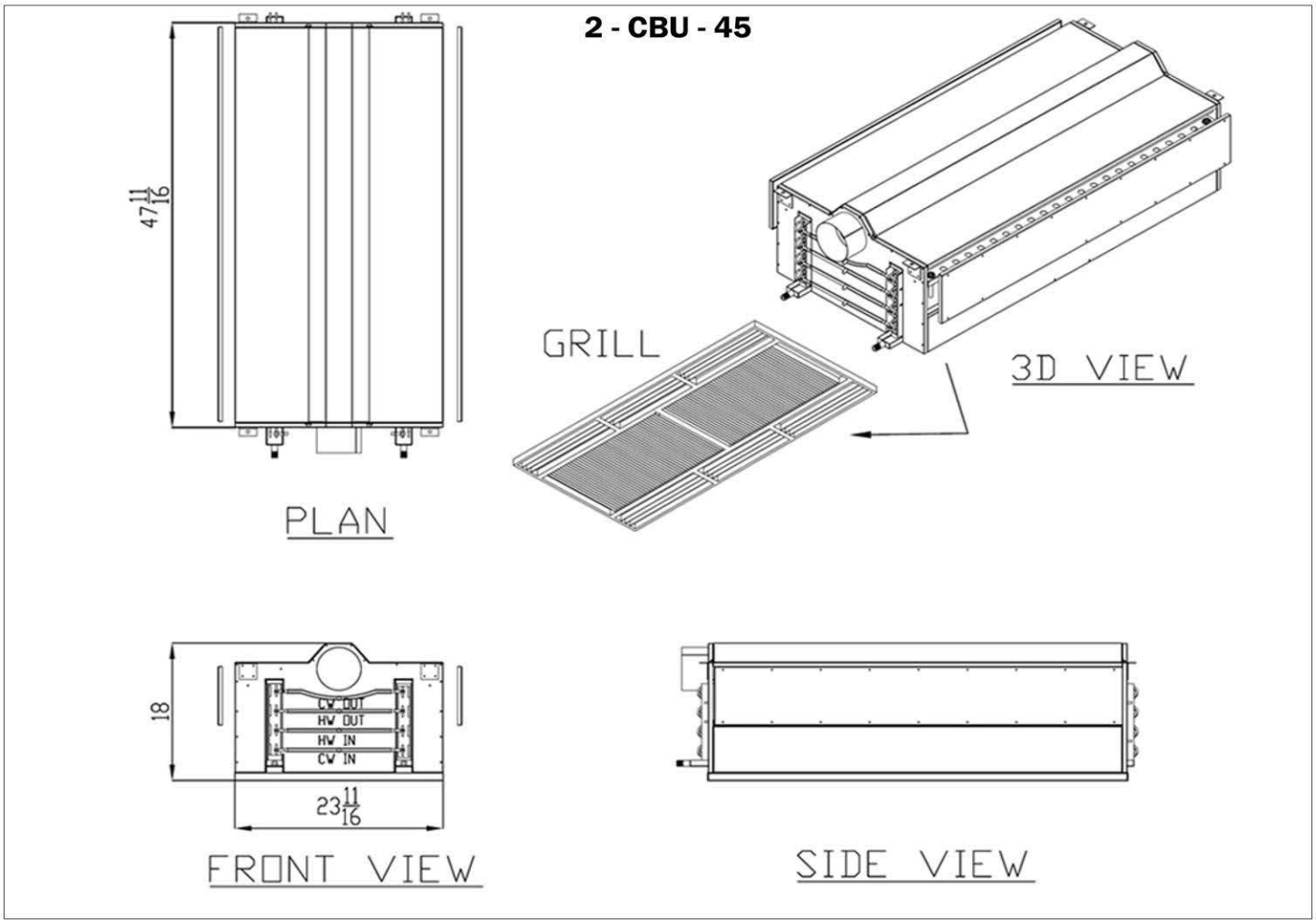

MAFNA AIR TECHNOLOGIES Inc.
Design and Engineering
Smart Air Solutions

CUSTOM CHILLED BEAM UNITS

PROJECT	CLIENT	REPRESENTATIVE	DATE SHIPPED
Madigan Army Medical Center Repair Bldg 9926B CBUs(15), AHU (1)x 2,760cfm	Madigan Army Medical Center Joint Base Lewis-McChord, WA	Mechanical Sales Inc. Seattle, WA	April 24 2012

AHU

CBUs

2-ATU-45

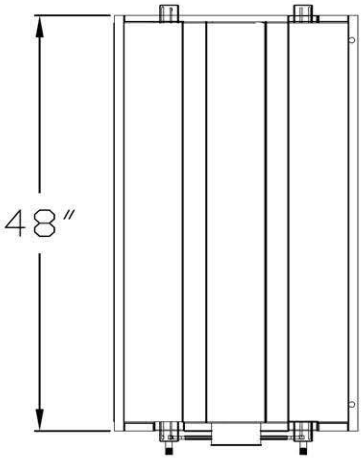

PLAN

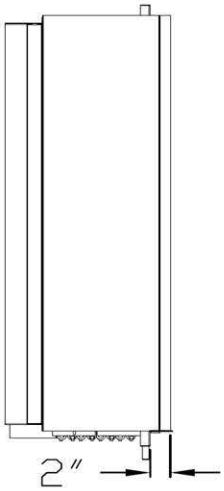

SIDE VIEW

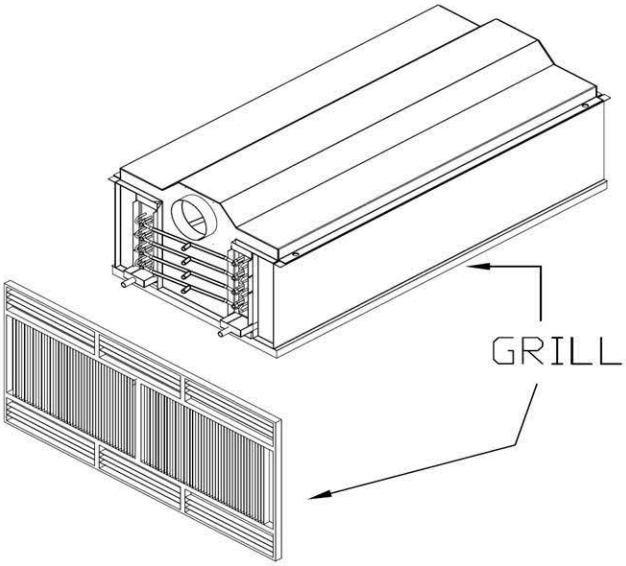

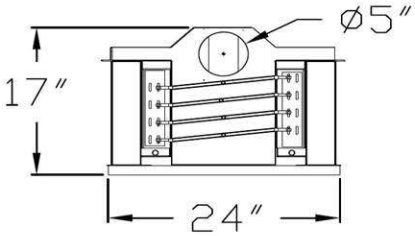

FRONT VIEW

MAFNA AIR TECHNOLOGIES INC. 475 Sheldon Dr, Cambridge, Ont, Canada, N1T 2B7 (T): 519.624.4622 (F): 519.624.9854		This document contains confidential information proprietary to Mafna Air Technologies Inc. No portion may be produced or disclosed to others, used in any way, except as authorized in writing by MAFNA AIR TECHNOLOGIES INC.
PROJECT	2111-MAMC9926B	
CUSTOMER	US Army Corp	

1-CBU-24

1-CBU-48

2-CBU-24

2-CBU-48

MAFNA Air Technologies Inc.

475 Sheldon Drive, Cambridge, Ontario Canada N1T 2B7

[V] 519.624.4622 [F] 519.624.9854 [E] mafna@mafna.com

MAFNA

… In Every Environment

MAFNA Air Technologies Inc

Canada & USA
519.624.4622
475 Sheldon Drive
Cambridge, ON
Canada N1T 2B7

India & Far East
573.529.5600
D-20 Gopalpur Industrial Area
UPSIDC Sikandrabad, Bulandshahr
U.P. (India) 203205

Gulf & Middle East
052.996.6743
P.O.Box 16405, #410,
BC-5 Business Park
RAKFTZ, RAK, United Arab Emirates

Fax: 519.624.9854
www.mafna.com
email: mafna@mafna.com

Mafna customers include:

American Airlines
Bay Regional Medical Center
Bell Canada
Bombardier
Brock University
Cape Cod Hospital
City of New York
City of Toronto
Clarkson University
Cornell University
Corning Inc
DeBeers Diamond Inc.
Dow Chemical
ENI Petroleum
Georgia State University
Glaxo Smith Kline
GO Transit
Gold's Gym
Hamilton Health Sciences Center
Lakehead University
Memorial Sloan-Kettering Cancer Center
New York Methodist Hospital
Peel District School Board
Queens University
Royal Bank of Canada
Sofina Foods
State of Alaska
State of Massachusetts
State University of New York
Sunnybrook Hospital
University of Illinois
University of Michigan
University of Rochester
US Department of Army
US Department of Navy
Washington State University
Women's College Hospital
Xerox Corporation
York University